CS1501

Digital Power Factor Correction Control IC

Features

- Digital EMI Noise Shaping
- Adaptive Digital Energy Controller
  - Excellent Efficiency Under All Load and Line Conditions
  - Zero-voltage Switching Topology
- Minimal External Devices Required
- Adaptive Digital Control Loop
- Comprehensive Safety Features
  - Undervoltage Lockout (UVLO)
  - Output Overvoltage Protection
  - Cycle-by-cycle Current Limiting
  - Open/Short Loop Protection for IAC & IFB Pins
  - Thermal Shutdown
- Pin placement similar to traditional boundary mode (CRM) Controllers

Applications

- LCD and LED TVs
- Notebooks
- Server/Telecom

Overview

The CS1501 is a high-performance digital power factor correction (PFC) controller designed for switching mode power supply (SMPS) applications. The CS1501 actively manages the power factor correction while achieving high efficiency over a wide load range.

The CS1501 adaptively controls the input AC current so that it is in phase with the AC mains voltage and its waveform mimics the input voltage waveform. The PFC controller executes adaptive digital algorithms designed to shape the AC mains input current waveform to be in phase with the input voltage waveform.

The CS1501 is equipped with a zero-current detection (ZCD) circuit providing the PFC digital controller the capability to turn on the MOSFET when the voltage across the drain and source is near zero. Additionally, a current-sensing circuit is incorporated for instantaneous overcurrent protection.

Ordering Information

See page 15.

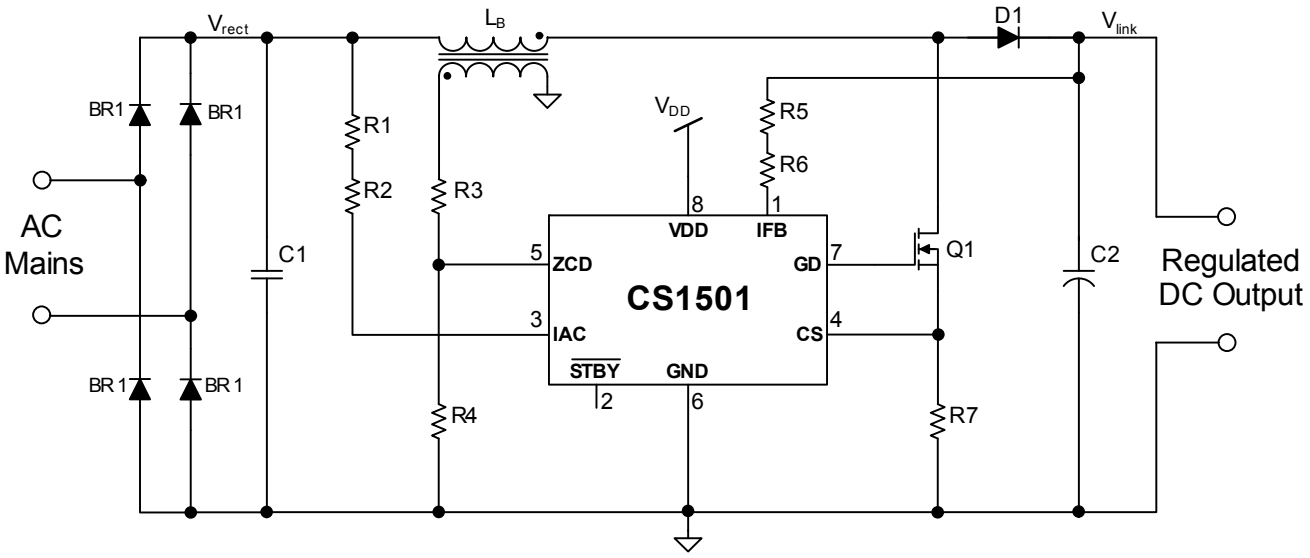

Preliminary Product Information | This document contains information for a new product. Cirrus Logic reserves the right to modify this product without notice.

Cirrus Logic, Inc.
http://www.cirrus.com

Copyright © Cirrus Logic, Inc. 2011
(All Rights Reserved)

JUN '11
DS927PP6

1. INTRODUCTION

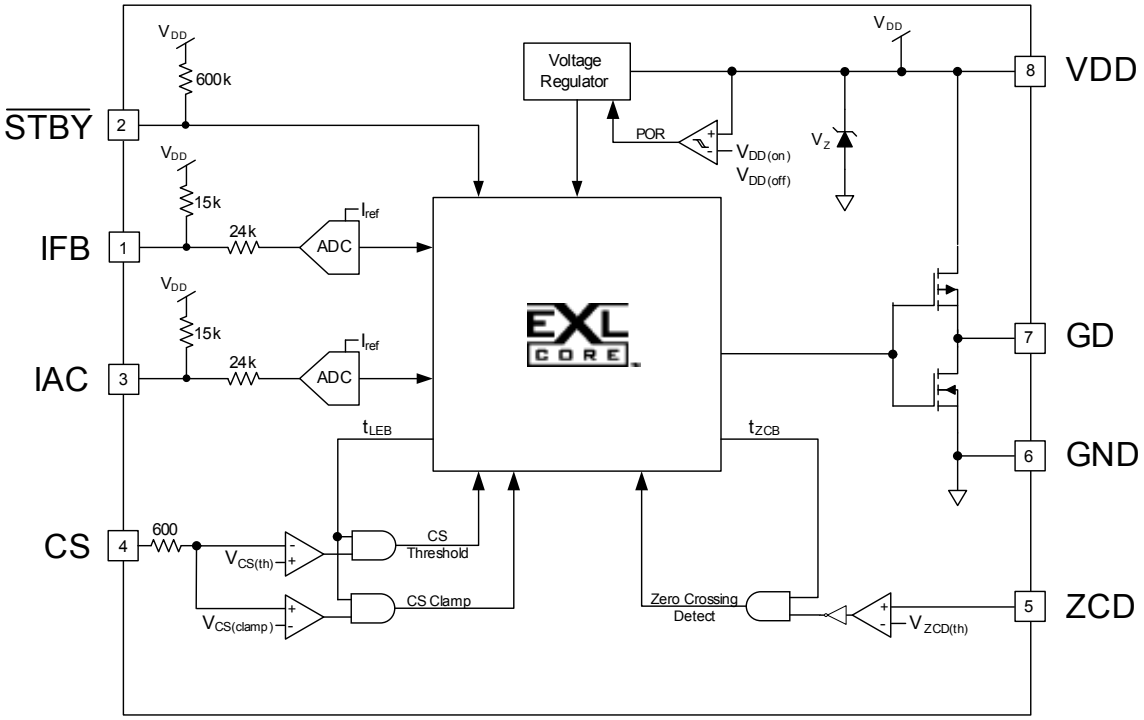

Figure 1. CS1501 Block Diagram

The CS1501 digital power factor correction (PFC) control IC is designed to deliver the lowest system cost by reducing the total number of system components and optimizing the EMI noise signature, which reduces the conducted EMI filter requirements. The CS1501 digital algorithm determines the behavior of the boost converter during startup, normal operation, and under fault conditions (overvoltage, overcurrent, and overtemperature).

Figure 1 illustrates a high-level block diagram of the CS1501. The PFC processor logic regulates the power transfer by using an adaptive digital algorithm to optimize the PFC active-switch (MOSFET) drive signal duty cycle and switching frequency. The adaptive controller uses independent analog-to-digital converter (ADC) channels when sensing the feedback and feedforward analog signals required to implement the digital PFC control algorithm.

The AC mains rectified voltage (on pin IAC) and PFC output link voltage (on pin IFB) are transformed by the PFC processor logic and used to generate the optimum PFC active-switch drive signal (GD) by calculating the optimal switching frequency and t_{ON} time on a cycle-by-cycle basis.

An auxiliary winding is typically added to the PFC boost inductor to provide zero-current detection (ZCD) information. The ZCD acts as a demagnetization sensor used to monitor the PFC active-switching behavior and efficiency. The auxiliary voltage is normalized using an external attenuator and is connected to the ZCD pin, providing the CS1501 a mechanism to detect the valley/zero crossings. The ZCD comparator looks for the zero crossing on the auxiliary winding and switches when the auxiliary voltage is below zero. Switching in the valley of the oscillation minimizes the switching losses and reduces EMI noise.

The PFC controller uses a current sensor for overcurrent protection. The boost inductor peak current is measured across an external resistor in the switching circuit on a cycle-by-cycle basis. An overcurrent fault is generated when the sense voltage applied to the CS pin exceeds a predefined reference voltage.

The CS1501 includes a supervisor & protection circuit to manage startup, shutdown, and fault conditions. The protection circuit is designed to prevent output overvoltage as a result of load and AC mains transients. The PFC power converter main rectified voltage (V_{rect}) and output link voltage (V_{link}) are monitored for overvoltage faults which would lead to shutdown of the PFC controller. The PFC overvoltage protection is designed for auto-recovery, i.e. operation resumes once the fault clears.

2. PIN DESCRIPTION

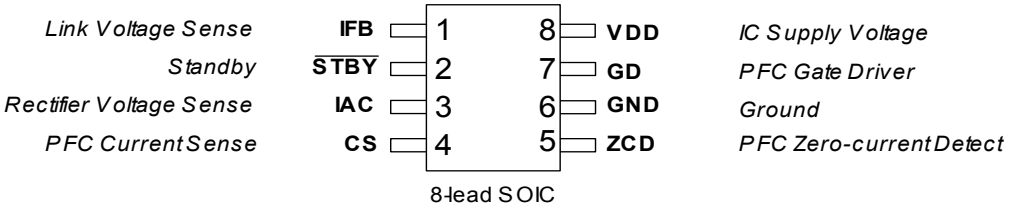

Figure 2. CS1501 Pin Assignments

Pin Name	Pin #	I/O	Description
IFB	1	IN	**Link Voltage Sense** — A current proportional to the output link voltage of the PFC is input into this pin. The current is measured with an ADC.
$\overline{\text{STBY}}$	2	IN	**Standby** — A voltage below 0.8V puts the IC into a non-operating, low-power state. The input has an internal 600kΩ pull-up resistor to the V_{DD} pin.
IAC	3	IN	**Rectifier Voltage Sense** — A current proportional to the rectified line voltage is input into this pin. The current is measured with an ADC.
CS	4	IN	**PFC Current Sense** — The current flowing in the PFC MOSFET is sensed through a resistor. The resulting voltage is applied to this pin and digitized for use by the PFC computational logic to limit the maximum current through the power FET.
ZCD	5	IN	**Zero-current Detect** — Boost Inductor demagnetization sensing input for zero-current detection (ZCD) information. The pin is externally connected to the PFC boost inductor auxiliary winding through an external resistor divider.
GND	6	PWR	**Ground** — Common reference. Current return for both the input signal portion of the IC and the gate driver.
GD	7	OUT	**PFC Gate Driver** — The totem pole stage is able to drive the power MOSFET with a peak current of 0.5A source and 1.0A sink.
V_{DD}	8	PWR	**IC Supply Voltage** — Supply voltage of both the input signal portion of the IC and the gate driver. A storage capacitor is connected on this pin to serve as a reservoir for operating current for the device, including the gate drive current to the power transistor. This pin is clamped to a maximum voltage (V_Z) by an internal zener function.

3. CHARACTERISTICS AND SPECIFICATIONS

3.1 Electrical Characteristics

Typical characteristics conditions:

T_A = 25°C, V_{DD} = 13V, GND = 0V

All voltages are measured with respect to GND.

Unless otherwise specified, all current are positive when flowing into the IC.

Minimum/Maximum characteristics conditions:

T_J = -40° to +125°C, V_{DD} = 10V to 15V, GND = 0V

Parameter	Condition	Symbol	Min	Typ	Max	Unit
V_{DD} Supply Voltage						
Operating Range	After Turn-on	V_{DD}	7.9	-	17.0	V
Turn-on Threshold Voltage	V_{DD} Increasing	$V_{DD(on)}$	9.8	10.2	10.5	V
Turn-off Threshold Voltage (UVLO)	V_{DD} Decreasing	$V_{DD(off)}$	7.9	8.1	8.3	V
UVLO Hysteresis		V_{Hys}	-	2.1	-	V
Zener Voltage	I_{DD} = 20mA	V_Z	17.0	17.9	18.7	V
V_{DD} Supply Current						
Startup Supply Current	$V_{DD} = V_{DD(on)}$	I_{ST}	-	68	80	µA
Operating Supply Current [3]	C_L = 1nF, fsw = 70kHz	I_{DD}	-	1.5	1.7	mA
Standby Supply Current	$\overline{STBY}$ < 0.8V	I_{SB}	-	80	112	µA
Reference						
Reference Current		I_{ref}	-	129	-	µA
PFC Gate Drive						
Output Source Resistance	I_{GD} = 100mA, V_{DD} = 13V	R_{OH}	-	9	-	Ω
Output Sink Resistance	I_{GD} = -200mA, V_{DD} = 13V	R_{OL}	-	6	-	Ω
Rise Time [3]	C_L = 1nF, V_{DD} = 13V	t_r	-	32	45	ns
Fall Time [3]	C_L = 1nF, V_{DD} = 13V	t_f	-	15	25	ns
Output Voltage Low State	I_{GD} = -200mA, V_{DD} = 13V	Vol	-	0.9	1.3	V
Output Voltage High State	I_{GD} = 100mA, V_{DD} = 13V	Voh	11.3	11.8	-	V
Zero-current Detection (ZCD)						
ZCD Threshold		$V_{ZCD(th)}$	-	50	-	mV
ZCD Blanking		t_{ZCB}	-	200	-	ns
ZCD Sink/Source Current	V_{ZCD} = 50mV	I_{ZCD}	-2	-1	2	mA
Upper Voltage Clamp	I_{ZCD} = 1mA	V_{CLP}	-	V_{DD}	-	V
Overvoltage Protection (OVP)						
IFB Current at Startup Mode		$I_{IFB(startup)}$	-	116	-	µA
IFB Current at Normal Mode		$I_{IFB(norm)}$	-	129	-	µA
OVP Threshold	I_{ref} = 129µA	I_{OVP}	-	136	-	µA
OVP Hysteresis	I_{ref} = 129µA	$I_{OVP(Hy)}$	-	2	-	µA
Overcurrent Protection (OCP)						
Current Sense Reference Clamp		$V_{CS(clamp)}$	-	1.0	-	V
Threshold on Current Sense		$V_{CS(th)}$	-	0.5	-	V
Leading Edge Blanking		t_{LEB}	-	300	-	ns
Delay to Output		t_{CS}	-	60	350	ns

Parameter	Condition	Symbol	Min	Typ	Max	Unit
Brownout Protection (BP)						
Input Brownout Protection Threshold	gate drive turns off	$I_{BP(lower)}$	-	31.6	-	µA
Input Brownout Recovery Threshold	gate drive turns on	$I_{BP(upper)}$	-	39.6	-	µA
Thermal Protection [1]						
Thermal Shutdown Threshold		T_{SD}	134	147	159	°C
Thermal Shutdown Hysteresis		$T_{SD(Hy)}$	-	9	-	°C
$\overline{STBY}$ Input [2]						
Logic Threshold Low			-	-	0.8	V
Logic Threshold High			V_{DD}-0.8	-	-	V

Notes:
1. Specifications guaranteed by design and are characterized and correlated using statistical process methods.
2. $\overline{STBY}$ is designed to be driven by an open collector. The input is internally pulled up with a 600kΩ resistor.
3. For test purposes, load capacitance (C_L) is 1nF and is connected as shown in the following diagram.

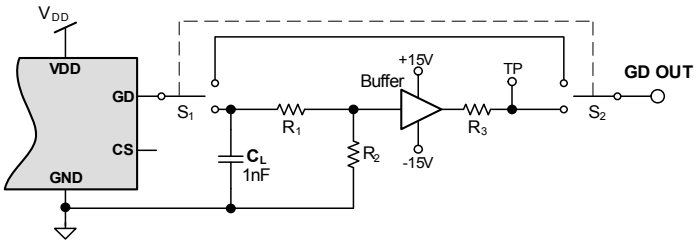

3.2 Absolute Maximum Ratings

Pin	Symbol	Parameter	Value	Unit
8	V_{DD}	IC Supply Voltage	V_Z	V
1,3,4,5	-	Analog Input Maximum Voltage	-0.5 to V_Z	V
1,3,4,5	-	Analog Input Maximum Current	50	mA
7	V_{GD}	Gate Drive Output Voltage	-0.3 to V_Z	V
7	I_{GD}	Gate Drive Output Current	-1.0 / +0.5	A
-	P_D	Total Power Dissipation @ T_A = 50 °C	600	mW
-	θ_{JA}	Junction-to-Ambient Thermal Impedance	107	°C/W
-	T_A	Operating Ambient Temperature Range[1]	-40 to +125	°C
-	T_J	Junction Temperature Operating Range	-40 to +125	°C
-	T_{Stg}	Storage Temperature Range	-65 to +150	°C
All Pins	ESD	Electrostatic Discharge Capability Human Body Model Machine Model Charged Device Model	 2000 200 500	V

Notes:
4. The CS1501 has an internal shunt regulator that limits the voltage on the V_{DD} pin. V_Z, the shunt regulation voltage, is defined in the *VDD Supply Voltage* section of the *Characteristics and Specifications* section on the previous page.
5. Long term operation at the maximum junction temperature will result in reduced product life. Derate internal power dissipation at the rate of 50 mW/ °C for variation over temperature.

WARNING:

Operation at or beyond these limits may result in permanent damage to the device.
Normal operation is not guaranteed at these extremes.

4. TYPICAL ELECTRICAL PERFORMANCE

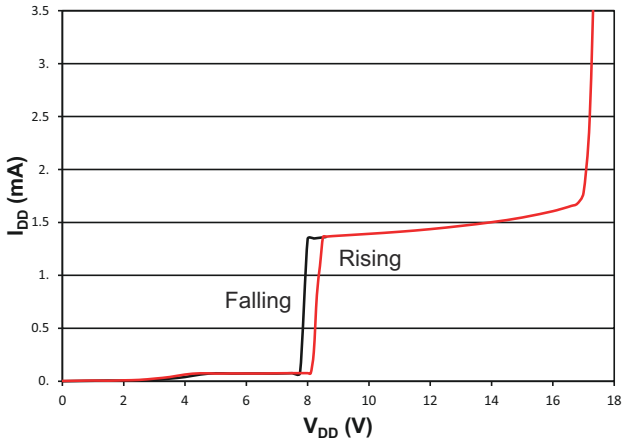

Figure 3. Supply Current vs. Supply Voltage

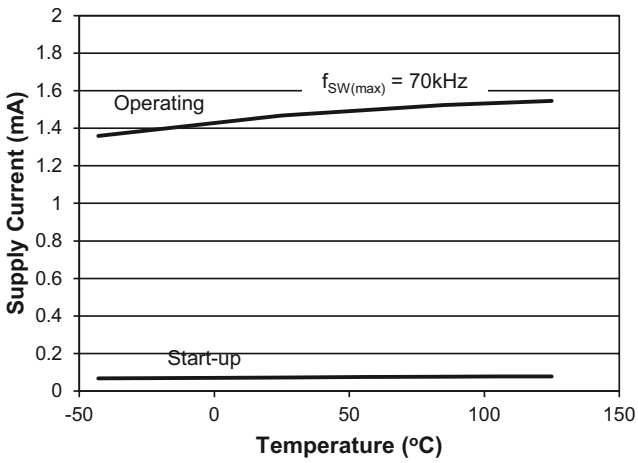

Figure 4. Supply Current (I_{SB}, I_{ST}, I_{DD}) vs. Temp

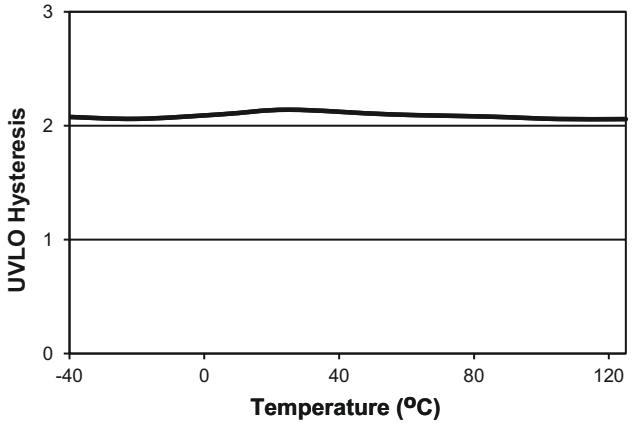

Figure 5. UVLO Hysteresis vs. Temp

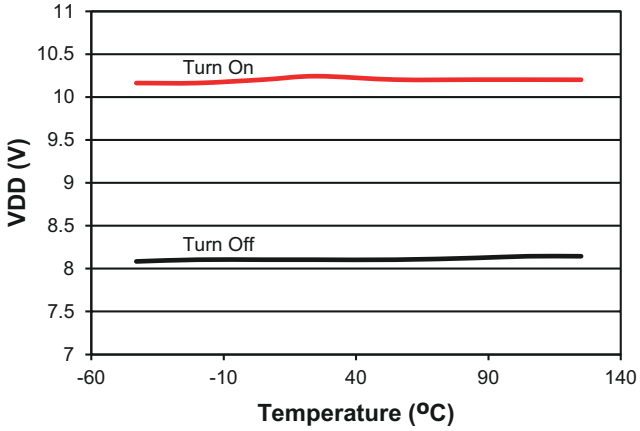

Figure 6. Turn-on & Turn-off Threshold vs. Temp

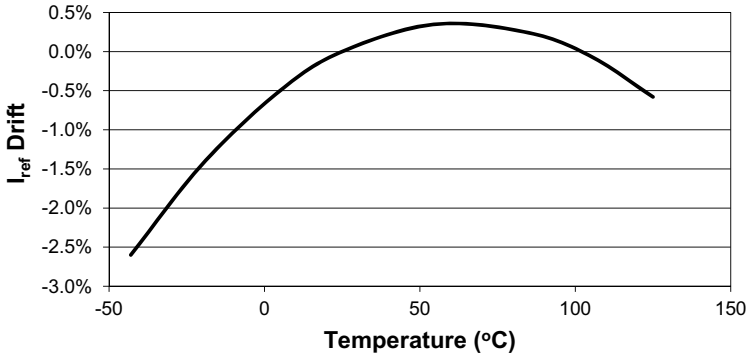

Figure 7. Reference Current (I_{ref}) Drift vs. Temp

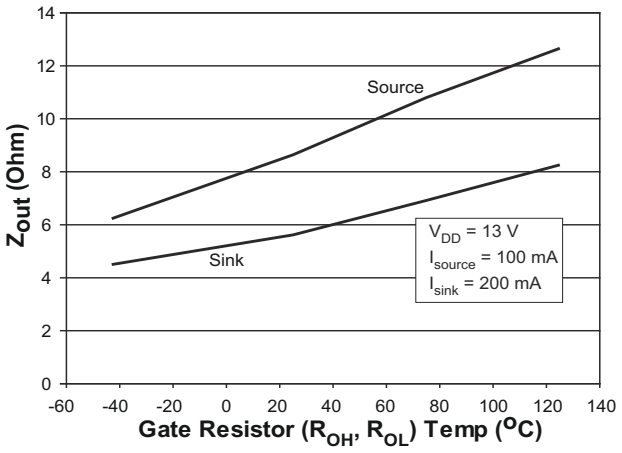

Figure 8. Gate Resistance (R_{OH}, R_{OL}) vs. Temp

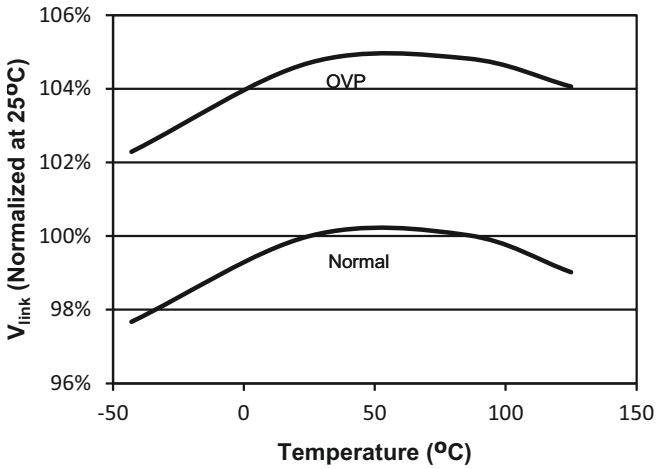

Figure 9. OVP vs. Temp

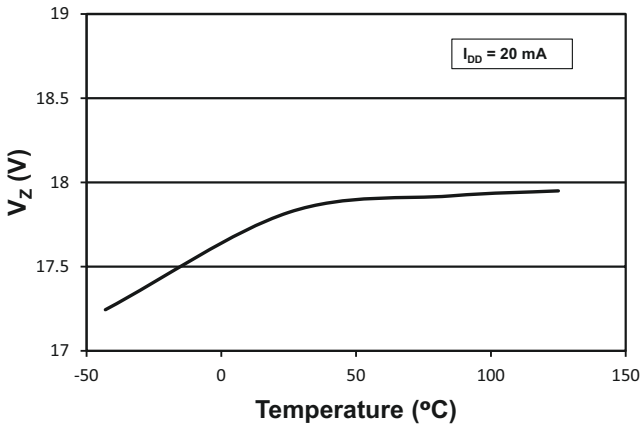

Figure 10. V_{DD} Zener Voltage vs. Temp

5. GENERAL DESCRIPTION

The CS1501 offers numerous features, options, and functional capabilities to the designer of switching power converters. This digital PFC control IC is designed to replace legacy analog PFC controllers with minimal design effort.

5.1 PFC Operation

One key feature of the CS1501 is its operating frequency profile. Figure 11 illustrates how the frequency varies over one half cycle of the line voltage in steady-state operation. When power is first applied to the CS1501, it examines the line voltage and adapts its operating frequency to the line voltage as shown in Figure 11. The operating frequency is varied from the peak to the trough of the AC input. During startup, the control algorithm generates maximum power while operating in critical conduction mode (CRM), providing an approximate square-wave current envelop within every half-line cycle.

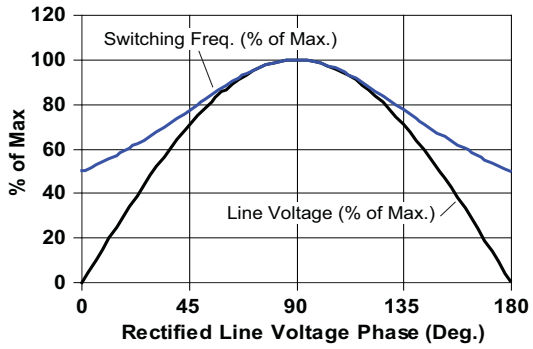

Figure 11. Switching Frequency vs. Phase Angle

Figure 12 illustrates how the operating frequency (as a percentage of maximum frequency) changes with output power and the peak of the line voltage.

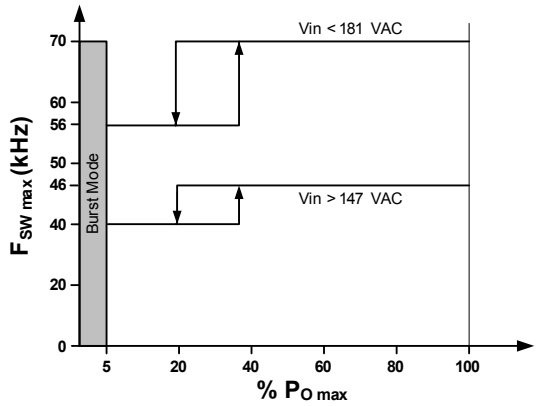

Figure 12. Max. Switching Frequency vs. Output Power

When P_O falls below 5%, the CS1501 changes to Burst Mode. (Refer to *Burst Mode* section for more information.)

The CS1501 is designed to function as a DCM controller. However, during peak periods, the controller may interchange control methods and operate in a quasi-critical-conduction mode (quasi-CRM) at low line. For example, at 90VAC main input under full load, the PFC controller will function as a quasi-CRM controller at the peak of the AC line cycle, as shown in Figure 13.

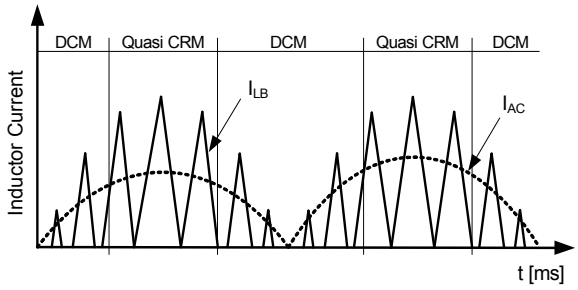

Figure 13. DCM and quasi-CRM Operation with CS1501

The zero-current detection (ZCD) of the boost inductor is achieved using an auxiliary winding. When the stored energy of the inductor is fully released to the output, the voltage on the ZCD pin decreases, triggering a new switching cycle. This quasi-resonant switching allows the active switch to be turned on with near-zero inductor current, resulting in a nearly lossless switch event. This minimizes turn-on losses and EMI noise created by the switching cycle. Power factor correction control is achieved during light load by using on-time modulation.

5.2 Startup vs. Normal Operation Mode

The CS1501 has two discrete operation modes: startup and normal. Startup mode will be activated when V_{link} is less than 90% of nominal value, $V_{O(startup)}$ and remains active until V_{link} reaches 100% of nominal value, as shown in Figure 14. Startup mode is activated during initial system power-up. Any V_{link} drop to less than $V_{O(startup)}$, such as a load change, can cause the system to enter startup mode until V_{link} is brought back into regulation.

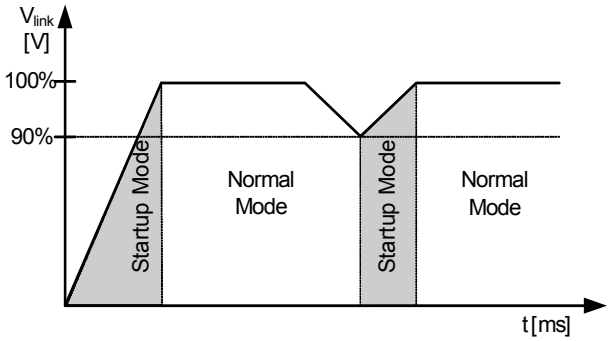

Figure 14. Startup and Normal Modes

Startup mode is defined as a surge of current delivering maximum power to the output regardless of the load. During every active switch cycle, the 'ON' time is calculated to drive a constant peak current over the entire line cycle. However, the 'OFF' time is calculated based on the DCM/CCM boundary equation.

5.3 Burst Mode

Burst mode is utilized to improve system efficiency when the system output power (P_o) is <5% of nominal. Burst mode is implemented by intermittently disabling the PFC over a full half-line period under light-load conditions, as shown in Figure 15.

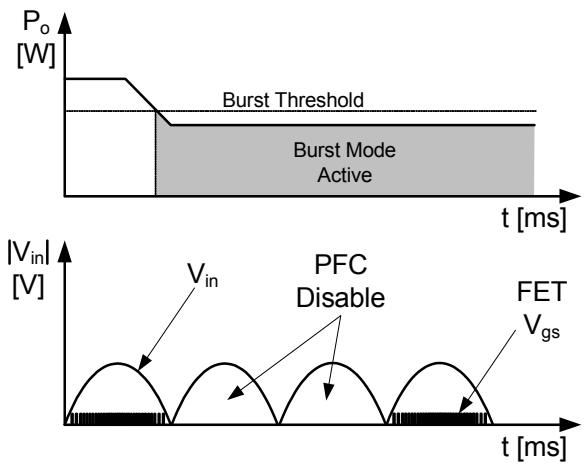

Figure 15. Burst Mode

5.4 Output Power and PFC Boost Inductor

In normal operating mode, the nominal output power is estimated by the following equation.

$$P_o = \alpha \times \eta \times (V_{in(min)})^2 \times \frac{V_{link} - (V_{in(min)} \times \sqrt{2})}{2 \times f_{max} \times L_B \times V_{link}} \quad \text{[Eq.1]}$$

where:

- P_o — rated output power of the system
- η — efficiency of the boost converter (estimated as 100% by the PFC algorithm)
- $V_{in(min)}$ — minimum RMS line voltage is 90V, measured after the rectifier and EMI filter
- V_{link} — nominal PFC output voltage (must be 400V)
- f_{max} — maximum switching frequency is 70kHz
- L_B — boost inductor specified by rated power requirement
- $\alpha < 1$ — margin factor to guarantee rated output power (P_o) against boost inductor tolerances.

Equation 1 is provided for explanation purposes only. Using substituted required design values for V_{link} and f_{max} gives the following equation:

$$P_o = \alpha \times \eta \times (90V)^2 \times \frac{400V - (90V \times \sqrt{2})}{2 \times 70kHz \times L_B \times 400V} \quad \text{[Eq.2]}$$

Changing the value for the V_{link} voltage is not recommended.

Solving Equation 2 for the PFC boost inductor, L_B, gives the following equation:

$$L_B = \alpha \times \eta \times (90V)^2 \times \frac{400V - (90V \times \sqrt{2})}{2 \times 70kHz \times P_o \times 400V} \quad \text{[Eq.3]}$$

If a value of the boost inductor other than that obtained from Equation 3 above is used, the total output power capability as well as the minimum input voltage threshold will differ according to Equation 2. Note that if the input voltage drops below 90Vrms and the inductance value is <L_B, the link voltage V_{link} will drop below 400V and fall out of regulation.

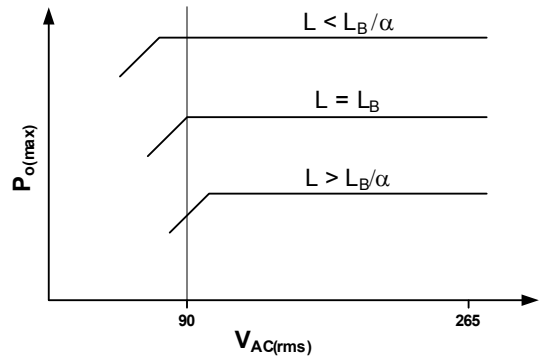

Figure 16. Relative Effects of Varying Boost Inductance

5.5 PFC Output Capacitor

The value of the PFC output capacitor should be chosen based upon voltage ripple and hold-up requirements. To ensure system stability with the digital controller, the recommended value of the capacitor is within the range of 0.5µF/watt to 2.0µF/watt with a V_{link} voltage of 400V.

5.6 Output IFB Sense & Input IAC Sense

A current proportional to the PFC output voltage, V_{link}, is supplied to the IC on pin IFB and is used as a feedback control signal. This current is compared against an internal fixed-value reference current.

The ADC is used to measure the magnitude of the I_{IFB} current through resistor R_{IFB}. The magnitude of the I_{IFB} current is then compared to an internal reference current (I_{ref}) of 129µA.

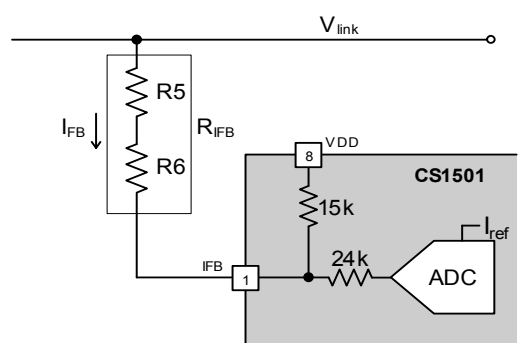

Figure 17. IFB Input Pin Model

Resistor R_{IFB} sets the feedback current and is calculated as follows:

$$R_{IFB} = \frac{V_{link} - V_{DD}}{I_{ref}} = \frac{400V - V_{DD}}{129mA} \quad \text{[Eq.4]}$$

By using digital loop compensation, the voltage feedback signal does not require an external compensation network.

A current proportional to the AC input voltage is supplied to the IC on pin IAC and is used by the PFC control algorithm.

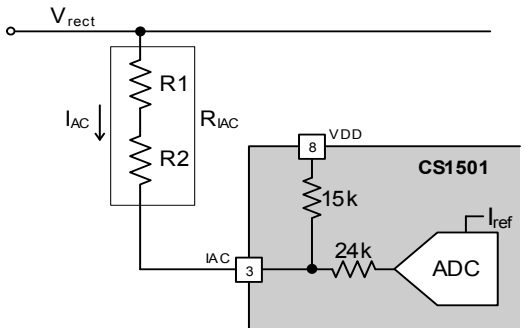

Figure 18. IAC Input Pin Model

Resistor R_{IAC} sets the I_{AC} current and is derived as follows:

$$R_{IAC} = R_{IFB} \quad \text{[Eq.5]}$$

For optimal performance, resistors R_{IAC} & R_{IFB} should use 1% tolerance or better resistors for best V_{link} voltage accuracy.

5.7 Valley Switching

The zero-current detection (ZCD) pin is monitored for demagnetization in the auxiliary winding of the boost inductor (L_B). The ZCD circuit is designed to detect the V_{Aux} valley/zero crossings by sensing the voltage transformed onto the auxiliary winding of L_B.

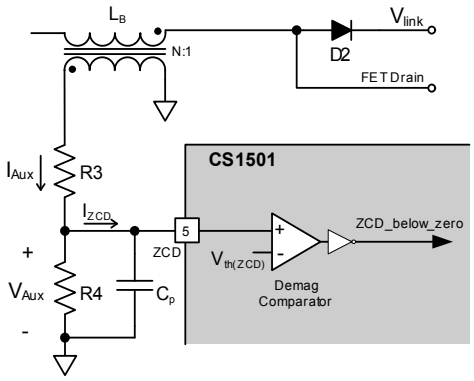

Figure 19. ZCD Input Pin Model

The objective of zero-voltage switching is to initiate each MOSFET switching cycle when its drain-source voltage is at the lowest possible voltage potential, thus reducing switching losses. CS1501 uses an auxiliary winding on the PFC boost inductor to implement zero-voltage switching.

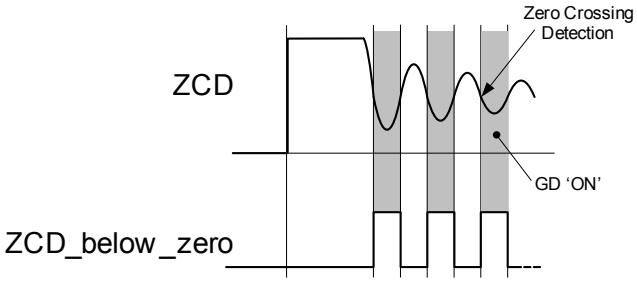

Figure 20. Zero-voltage Switch

During each switching cycle, when the boost diode current reaches zero, the boost MOSFET drain-source voltage begins oscillating at the resonant frequency of the boost inductor and MOSFET parasitic output capacitance. The ZCD_below_zero signal transitions from high to low just prior to a local minimum of the MOSFET drain-source voltage oscillation. The zero-crossing detect circuit ensures that a ZCD_below_zero pulse will only be generated when the comparator output is continuously high for a nominal time period (t_{ZCB}) of 200ns. Therefore, any negative edges on the comparator's output due to spurious glitches will not cause a pulse to be generated. Due to the CS1501's variable-frequency control, the MOSFET switching cycle will not always be initiated at the first resonant valley.

The external circuitry should be designed so that the current (I_{ZCD}) at the ZCD pin is approximately ±1.0mA. The table below depicts approximate values for R3 and R4 for a range of boost-to-auxiliary inductor turns ratio, N.

N	~R3	~R4
9	46kΩ	1.75kΩ
10	42kΩ	1.75kΩ
11	37.5kΩ	1.75kΩ
12	35.5kΩ	1.75kΩ
13	32kΩ	1.75kΩ
14	29.5kΩ	1.75kΩ
15	27.5kΩ	1.75kΩ

Table 1. Aux Inductor Turns Ratio vs. R3 and R4

Resistors R3 and R4 were calculated using V_{link} = 400V and C_p = 10pF.

Equation 6 is used to calculate the cut-off frequency defined by the RC circuit at the ZCD pin.

$$f_c = 1/(2\pi(R3 \parallel R4)C_p) \quad \text{[Eq.6]}$$

where:

f_c — The cut-off frequency, f_c, needs to be 10x the ringing frequency

C_p — Capacitance at the ZCD pin

5.8 Brownout Protection

The CS1501 brownout detection circuit monitors the peak of the V_{rect} input voltage and disables the PWM switching when it drops below a pre-determined threshold. Hysteresis and minimum detection time are provided to avoid brownout detection during short input transients. When brownout is detected, the CS1501 enters standby mode. On recovery from brownout, it re-enters normal operating mode.

Current I_{AC} is proportional to the AC input voltage V_{rect}, where $V_{rect} = R_{IAC} x I_{AC}$ and $R_{IAC} = R1+R2$ in Figure 18 on page 11. The digitized current applied to the IAC pin is monitored by the brownout protection algorithm. When V_{rect} drops below the brownout detection threshold, the CS1501 triggers a timer. The IC asserts the brownout protection and stops the gate-drive switching only if the timer exceeds 56ms. This is the equivalent of 7 rectified line cycles at 60Hz.

During the brownout state, the device continues monitoring the input line voltage. The device exits the brownout state when I_{AC} exceeds the brownout upper threshold for at least 56ms. Typical values for the lower ($I_{BP(lower)}$) and upper ($I_{BP(upper)}$) brownout thresholds are 31.6µA and 39.6µA, respectively.

The overpower protection may activate prior to brownout protection, depending on the load.

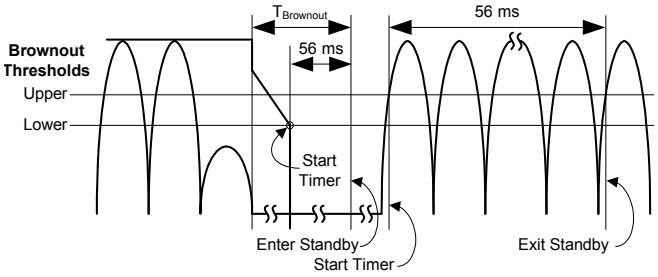

Figure 21. Brownout Sequence

The maximum response time of the brownout protection feature occurs at light-load conditions. It is calculated by Equation 7.

$$T_{Brownout} = 8\,ms + \frac{8\,ms}{5\,V}(128\,V - V_{BP(th)}) + 56\,ms \quad \text{[Eq.7]}$$

$$= 8 + \frac{8}{5}(128 - 94.8) + 56 = 117\,ms$$

where:

$V_{BP(th)}$ Brownout threshold voltage, $V_{BP(th)} = I_{BP(lower)} x R_{IAC}$

5.9 Overvoltage Protection

The overvoltage protection (OVP) will trigger immediately and stop the gate drive when the current into the IFB pin (I_{OVP}) exceeds 105% of the reference current (I_{ref}) value. The IC resumes gate drive switching when the measured current at IFB drops below $I_{OVP} - I_{OVP(Hy)}$. Equation 8 is used to calculate the OVP threshold.

$$V_{OVP} = R_{IFB} \times I_{OVP} + V_{DD} \quad \text{[Eq.8]}$$

5.10 Overcurrent Protection

To limit boost inductor current through the FET and to prevent boost inductor saturation conditions, the CS1501 incorporates a cycle-by-cycle peak inductor current limit circuit using an external shunt resistor to 'sense' the FET source current accurately. The overcurrent protection (OCP) circuit is designed to monitor the current when the active switch is turned on. The OCP circuit is enabled after the leading-edge blanking time (t_{LEB}). The shunt voltage is compared to a reference voltage, $V_{cs(th)}$, to determine whether an overcurrent condition exists. The OCP circuit triggers immediately, allowing the OCP algorithm to turn off the gate driver.

The overcurrent protection circuit is also designed to monitor for a catastrophic overcurrent occurrence by sensing sudden and abnormal operating currents. A second OCP threshold, $V_{cs(clamp)}$, determines whether a severe overcurrent condition exists. This immediately turns off the gate drive and the system enters a restart mode. The CS1501 inhibits all switching operations for approximately 1.6ms then attempts to restart normal operation.

5.11 Overpower Protection

The CS1501 incorporates an internal Overpower Protection (OPP) algorithm. This provides protection from overload conditions. This algorithm uses the condition that output power is a function of the boost inductor (Section 5.4).

Under moderate overload, V_{link} may droop up to 10% while maintaining rated power and PFC. Further increasing the load current causes V_{link} to drop below the startup threshold (~360V). Below this threshold, the circuit changes its operating mode to startup with more power available to raise V_{link}. As V_{link} reaches its nominal value, startup mode is canceled and power is now limited to the rated value. If the overload is still present, this cycle will repeat.

If a sustained overload, or a repeated cycle of overload events is detected for greater than 112mS, the CS1501 shuts down for 2.5 seconds, then attempts to restart.

5.12 Open/Short Loop Protection

If the PFC output sense resistor, R_{IFB}, fails (open or short to GND), the measured output voltage decreases at a slew rate of about 2 V/µs, which is determined by the ADC sampling rate. The IC stops the gate drive when the measured output voltage is lower than the measured line voltage. The IC resumes gate drive switching when the current into the IFB pin becomes larger than or equal to the current into the IAC pin and V_{link} is greater than the peak of the line voltage ($V_{rect(pk)}$). The maximum response time of open/short loop protection for R_{IFB} is about 150 µs.

5.13 Internal Overtemperature Protection

An internal thermal sensor triggers a shutdown when the temperature exceeds 135°C (nominal) on the silicon. The sensor sends a signal to the core that supplies current to all internal digital logic, cutting off power from them. Once the temperature of the IC has dropped by 9°C (nominal), the sensor resets, allowing power to the logic.

If the PFC input sense resistor R_{IAC} fails (open or short to GND), the current reference signal supplied to the IC on pin IAC falls to zero.

5.14 Standby ($\overline{STBY}$) Function

The standby ($\overline{STBY}$) pin provides a means by which an external signal can cause the CS1501 to enter a non-operating, low-power state. The $\overline{STBY}$ input is intended to be driven by an open-collector/open-drain device. Internal to the pin, there is a pull-up resistor connected to the V_{DD} pin as shown in Figure 22. Since the pull-up resistor has a high impedance, the user may need to provide a filter capacitor (up to 1000 pF) on this pin.

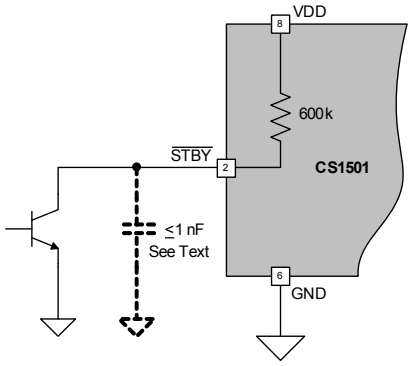

Figure 22. $\overline{STBY}$ Pin Connection

When the $\overline{STBY}$ pin is not used, it is recommended that the pin be tied to V_{DD} (pulled high).

5.15 Summary of Equations

Eq. #	Equation	Variables/Recommended Values
1	**Output Power** (page 10) $P_o = \alpha \times \eta \times (V_{in(min)})^2 \times \frac{V_{link} - (V_{in(min)} \times \sqrt{2})}{2 \times f_{max} \times L_B \times V_{link}}$	P_o Rated output power of the system. η Efficiency of the boost converter (estimated as 100% by the PFC algorithm).
2	**Output Power w/ recommended values** (page 10) $P_o = \alpha \times \eta \times (90Vrms)^2 \times \frac{400V - (90Vrms \times \sqrt{2})}{2 \times 70kHz \times L_B \times 400V}$	$V_{in(min)}$ Minimum RMS line voltage is 90Vrms, measured after the rectifier and EMI filter.
3	**Boost Inductor** (page 10) $L_B = \alpha \times \eta \times (90Vrms)^2 \times \frac{400V - (90Vrms \times \sqrt{2})}{2 \times 70kHz \times P_o \times 400V}$	V_{link} Nominal PFC output voltage must be 400V. f_{max} Maximum switching frequency is 70kHz.
4	**Output IFB Sense Resistor** (page 11) $R_{IFB} = \frac{V_{link} - V_{DD}}{I_{ref}} = \frac{400V - V_{DD}}{129\mu A}$	L_B Boost inductor specified by rated power requirement. α Margin factor to guarantee rated output power (P_o) against boost inductor tolerances.
5	**Input IAC Sense Resistor** (page 11) $R_{IAC} = R_{IFB}$	R_{IAC} Value of the IAC pin sense resistor(s).
6	**Auxiliary Winding Cut-off Frequency** (page 11) $f_c = 1/(2\pi(R3 \parallel R4)C_p)$	R_{IFB} Value of the IFB pin sense resistor(s). I_{ref} Value of the fixed, internal reference current.
7	**Maximum Response Time for Brownout**: (page 12) $T_{Brownout} = 8ms + \frac{8ms}{5V}(128V - V_{BP(th)}) + 56ms$	f_c The cut-off frequency, f_c, needs to be 10x the ringing frequency or f_c = 10MHz.
8	**Overvoltage Protection** (page 12) $V_{OVP} = R_{IFB} \times I_{OVP} + V_{DD}$	C_p Capacitance at the ZCD pin. C_p<10pF. $V_{BP(th)}$ Brownout threshold voltage. $V_{BP(th)}$ = 94.8V.
9	**Boost Inductor Peak Current** $I_{LB(pk)} = \frac{4 \times P_O}{\eta \times V_{in(min)} \times \sqrt{2}}$	C_{out} Value of the output capacitor in microfarads. $f_{line(min)}$ Minimum line frequency.
10	**Boost Inductor RMS Current** $I_{LB(rms)} = \frac{P_O}{V_{in(min)} \times \eta}$	V_{DD} IC Supply Voltage.
11	**V_{link} Voltage Ripple** $\Delta V_{link(rip)} = \frac{P_O}{2\pi \times f_{line(min)} \times V_{link} \times C_{out}}$	V_{OVP} OVP threshold. I_{OVP} Current into the IFB pin.

6. PACKAGE DRAWING

8L SOIC (150 MIL BODY) PACKAGE DRAWING

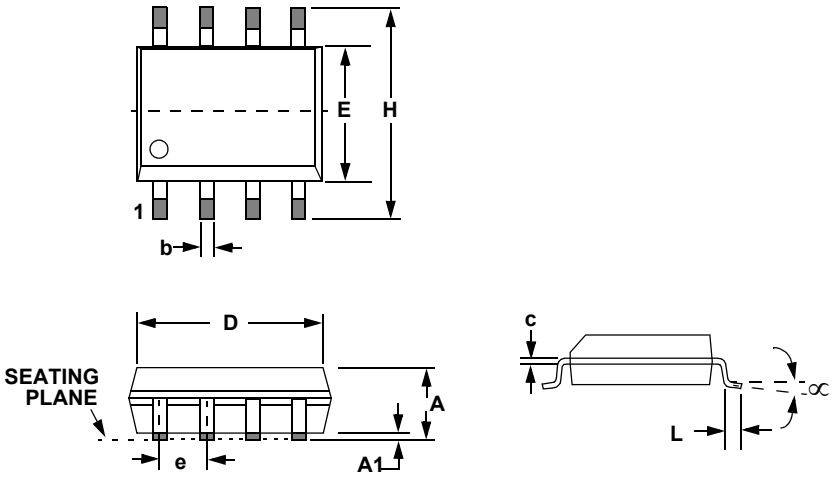

	INCHES		MILLIMETERS	
DIM	MIN	MAX	MIN	MAX
A	0.053	0.069	1.35	1.75
A1	0.004	0.010	0.10	0.25
B	0.013	0.020	0.33	0.51
C	0.007	0.010	0.19	0.25
D	0.189	0.197	4.80	5.00
E	0.150	0.157	3.80	4.00
e	0.040	0.060	1.02	1.52
H	0.228	0.244	5.80	6.20
L	0.016	0.050	0.40	1.27
∝	0°	8°	0°	8°

JEDEC # MS-012

7. ORDERING INFORMATION

Part #	Temperature Range	Package Description
CS1501-FSZ	-40°C to +125°C	8-lead SOIC, Lead (Pb) Free

8. ENVIRONMENTAL, MANUFACTURING, & HANDLING INFORMATION

Model Number	Peak Reflow Temp	MSL Rating[a]	Max Floor Life[b]
CS1501-FSZ	260°C	2	365 Days

a. MSL (Moisture Sensitivity Level) as specified by IPC/JEDEC J-STD-020.

b. Stored at 30°C, 60% relative humidity.

9. REVISION HISTORY

Revision	Date	Changes
PP1	NOV 2010	Preliminary Release - Updated block diagram and *General Description* section.
PP2	DEC 2010	Updated *Brownout Protection* section, *Overcurrent Protection* section. Added *Current Sense Reference Clamp* specification.
PP3	JAN 2011	Updated *STBY* pin and description.
PP4	APR 2011	Updated *Characteristics and Specifications* section.
PP5	MAY 2011	Updated *Typical Electrical Performance* section.
PP6	JUN 2011	Updated *Characteristics and Specifications* section.

Contacting Cirrus Logic Support

For all product questions and inquiries contact a Cirrus Logic Sales Representative.
To find one nearest you go to http://www.cirrus.com

IMPORTANT NOTICE

"Preliminary" product information describes products that are in production, but for which full characterization data is not yet available.

Cirrus Logic, Inc. and its subsidiaries ("Cirrus") believe that the information contained in this document is accurate and reliable. However, the information is subject to change without notice and is provided "AS IS" without warranty of any kind (express or implied). Customers are advised to obtain the latest version of relevant information to verify, before placing orders, that information being relied on is current and complete. All products are sold subject to the terms and conditions of sale supplied at the time of order acknowledgment, including those pertaining to warranty, indemnification, and limitation of liability. No responsibility is assumed by Cirrus for the use of this information, including use of this information as the basis for manufacture or sale of any items, or for infringement of patents or other rights of third parties. This document is the property of Cirrus and by furnishing this information, Cirrus grants no license, express or implied under any patents, mask work rights, copyrights, trademarks, trade secrets or other intellectual property rights. Cirrus owns the copyrights associated with the information contained herein and gives consent for copies to be made of the information only for use within your organization with respect to Cirrus integrated circuits or other products of Cirrus. This consent does not extend to other copying such as copying for general distribution, advertising or promotional purposes, or for creating any work for resale.

CERTAIN APPLICATIONS USING SEMICONDUCTOR PRODUCTS MAY INVOLVE POTENTIAL RISKS OF DEATH, PERSONAL INJURY, OR SEVERE PROPERTY OR ENVIRONMENTAL DAMAGE ("CRITICAL APPLICATIONS"). CIRRUS PRODUCTS ARE NOT DESIGNED, AUTHORIZED OR WARRANTED FOR USE IN PRODUCTS SURGICALLY IMPLANTED INTO THE BODY, AUTOMOTIVE SAFETY OR SECURITY DEVICES, LIFE SUPPORT PRODUCTS OR OTHER CRITICAL APPLICATIONS. INCLUSION OF CIRRUS PRODUCTS IN SUCH APPLICATIONS IS UNDERSTOOD TO BE FULLY AT THE CUSTOMER'S RISK AND CIRRUS DISCLAIMS AND MAKES NO WARRANTY, EXPRESS, STATUTORY OR IMPLIED, INCLUDING THE IMPLIED WARRANTIES OF MERCHANTABILITY AND FITNESS FOR PARTICULAR PURPOSE, WITH REGARD TO ANY CIRRUS PRODUCT THAT IS USED IN SUCH A MANNER. IF THE CUSTOMER OR CUSTOMER'S CUSTOMER USES OR PERMITS THE USE OF CIRRUS PRODUCTS IN CRITICAL APPLICATIONS, CUSTOMER AGREES, BY SUCH USE, TO FULLY INDEMNIFY CIRRUS, ITS OFFICERS, DIRECTORS, EMPLOYEES, DISTRIBUTORS AND OTHER AGENTS FROM ANY AND ALL LIABILITY, INCLUDING ATTORNEYS' FEES AND COSTS, THAT MAY RESULT FROM OR ARISE IN CONNECTION WITH THESE USES.

Cirrus Logic, Cirrus, and the Cirrus Logic logo designs are trademarks of Cirrus Logic, Inc. All other brand and product names in this document may be trademarks or service marks of their respective owners.