TL12W03-L(T30)

- 本資料は、製品の紹介を目的とした技術検討資料です。最終仕様段階で特性内容の変更を伴う場合もあります。製品設計を行う場合は、営業部門に最終仕様をご確認頂けます様お願い致します。
- 本資料の第三者への開示は、行わないようお願い致します。

- This material is technological examination material to aim at the product introduction. The change in the content of the characteristic might be accompanied at the final specification process. The final specification will be able to be gotten in the brokerage department when the product is designed and to get the confirmation.
- Please do not open this material to the third person.

Preliminary

TOSHIBA LED lamps

TL12W03-L(T30)

○ Surface-mount devices

- 10.5 (L) mm × 5.0 (W) mm × 2.1 (H) mm
- High luminous flux: 75 lm(typ.) @350 mA
- Color: white (warm white)
- Topr / Tstg: –40 to 100°C
- Reflow-solderable
- Standard embossed tape packing: T30 (500 / reel)
  8-mm pitch, 24-mm tape reel
- Applications : general lighting

Unit: mm

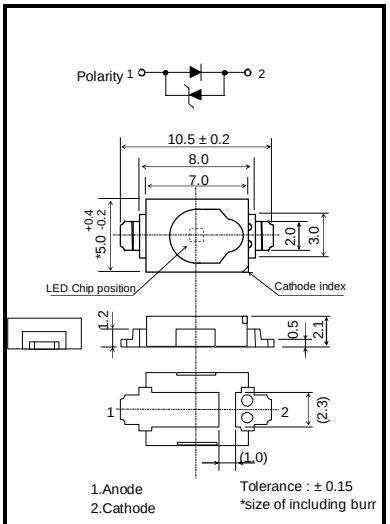

JEDEC	—
JEITA	—
TOSHIBA	—

Weight: 0.30 g (typ.)

Color and Material

Part Number	Color	Material
TL12W03-L	White (warm white)	InGaN

Absolute Maximum Ratings (Ta = 25°C)

Characteristics	Symbol	Rating	Unit
Forward Current	I_F	500	mA
Power Dissipation	P_D	1.95	W
Operating Temperature	T_{opr}	–40 to 100	°C
Storage Temperature	T_{stg}	–40 to 100	°C
Junction Temperature	T_j	120	°C

Note 1: Using continuously under heavy loads (e.g. the application of high temperature/current/voltage and the significant change in temperature, etc.) may cause this product to decrease in the reliability significantly even if the operating conditions (i.e. operating temperature/current/voltage, etc.) are within the absolute maximum ratings. Please design the appropriate reliability upon reviewing the Toshiba Semiconductor Reliability Handbook ("Handling Precautions"/"Derating Concept and Methods") and individual reliability data (i.e. reliability test report and estimated failure rate, etc).

Note 2: The junction-to-ambient thermal resistance, Rth(j-a), should be kept below 30℃/W so that the TL12W03-L is not exposed to a condition beyond the absolute maximum ratings. Rth(j-a): Thermal resistance from the LED junction to ambient temperature

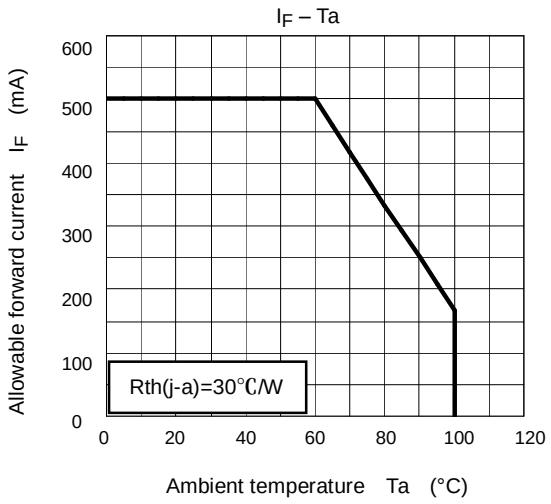

Electrical Characteristics (Ta = 25°C)

Characteristics	Symbol	Test condition	Min	Typ.	Max	Unit
Forward Voltage (Note 3)	V_F	I_F = 350 mA	2.9	3.3	3.9	V
Reverse Voltage	V_R	I_R = 1mA	—	0.75	—	V
Thermal Resistance (Note 4)	Rth(j-s)	I_F = 350 mA	—	8	—	°C/W

Note 3: V_F rank classification

Ta=25°C
Accuracy: +/-0.1V

Part Number		Forward Voltage V_F			
		Min	Typ.	Max	I_F
TL12W03-L(T30)		2.9	3.3	3.9	350
	1	2.9	—	3.4	
	2	3.4	—	3.9	
Unit		V			mA

The specification on the above table is used for V_F classification of LEDs in Toshiba facility.
Each reel includes the same rank LEDs. Let the delivery ratio of each rank be unquestioned.

Note 4: Rth(j-s): Thermal resistance from the LED junction to solder point.

Optical Characteristics (Ta = 25°C)

Characteristics	Symbol	Test condition	Min	Typ.	Max	Unit
Chromaticity	C_x	I_F = 350 mA	(Note 5)			—
	C_y	I_F = 350 mA	(Note 5)			—
Luminous flux (Note 6)	F	I_F = 350 mA	(47.6)	75	(95)	lm

Note 5: The product is tested at the following chromaticity coordinate groups.

Test conditions: I_F=350 mA, Ta=25°C
Accuracy: +/-0.01

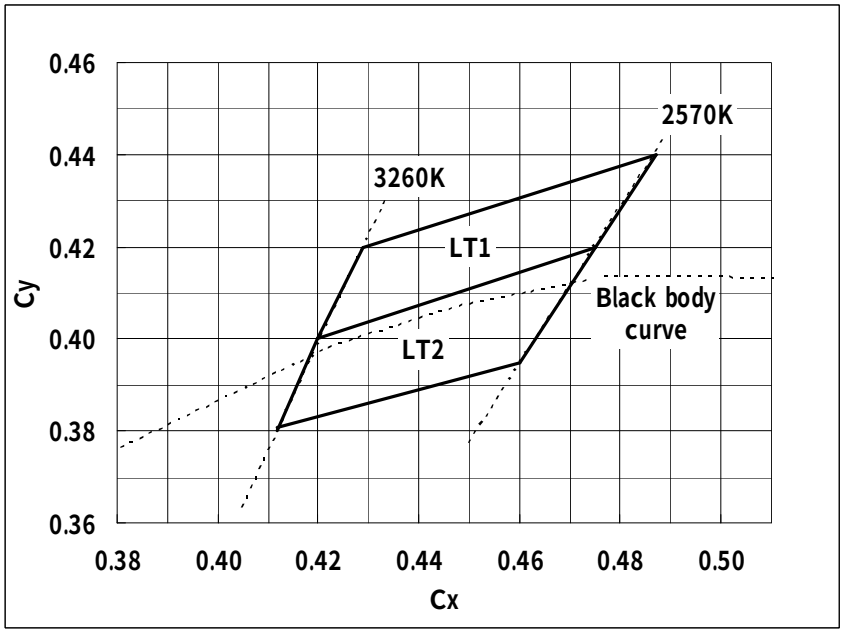

	Cx	Cy
LT1	0.420	0.400
	0.429	0.420
	0.487	0.440
	0.475	0.420
LT2	0.412	0.380
	0.420	0.400
	0.475	0.420
	0.460	0.395

Note 6: F rank classification

Ta=25°C
Accuracy: +/-20%

Part Number		Luminous flux F			
		Min	Typ.	Max	I_F
TL12W03-L(T30)		47.6	75	95	350
	E1	47.6	—	56.6	
	E2	56.6	—	67.3	
	F1	67.3	—	80	
	F2	80	—	95	
Unit		lm			mA

The specification on the above table is used for F classification of LEDs in Toshiba facility.
Each reel includes the same rank LEDs. Let the delivery ratio of each rank be unquestioned.

Note 6: Caution

- The product is sensitive to electrostatic and care must be fully taken when handling products. Particularly in the case that an over-voltage shall be applied, the overflowed energy may cause damage to or possibly result in destruction of the product. Users shall take absolutely secure countermeasures against electrostatic and surge when handling the product.
- This product is designed as a general display light source usage, and it has applied the measurement standard that matched with the sensitivity of human's eyes. Therefore, it is not intended for usage of functional application (ex. Light source for sensor, optical communication and etc) except general display light source.

TL12W03-L

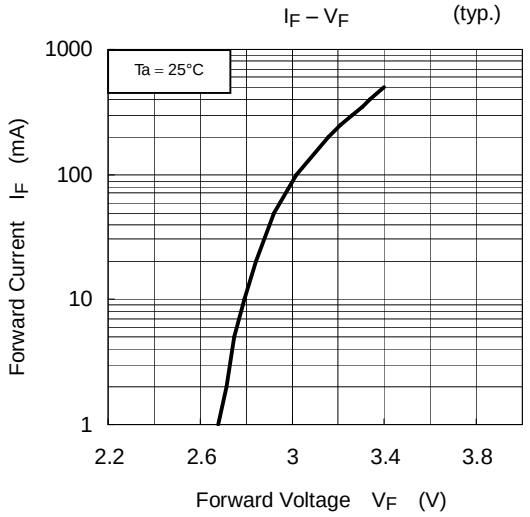
I_F – V_F (typ.)
Ta = 25°C
1000
100
10
1
Forward Current I_F (mA)
2.2
2.6
3
3.4
3.8
Forward Voltage V_F (V)

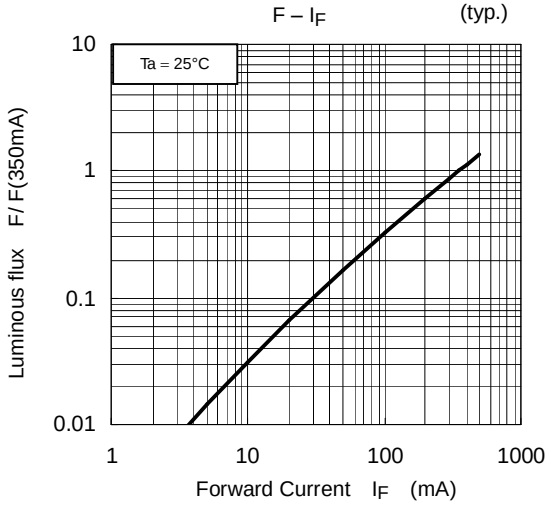
F – I_F (typ.)
Ta = 25°C
10
1
0.1
0.01
Luminous flux F/ F(350mA)
1
10
100
1000
Forward Current I_F (mA)

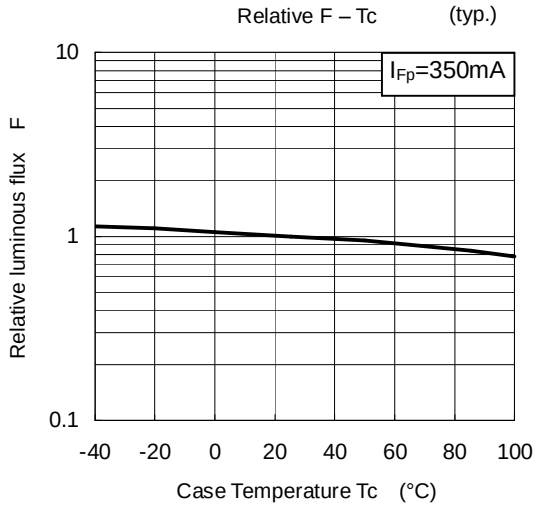
Relative F – Tc (typ.)
I_{Fp}=350mA
10
1
0.1
Relative luminous flux F
-40
-20
0
20
40
60
80
100
Case Temperature Tc (°C)

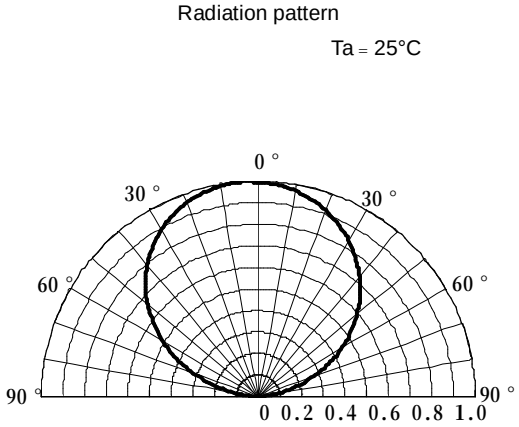
Radiation pattern
Ta = 25°C
0 °
30 °
30 °
60 °
60 °
90 °
90 °
0 0.2 0.4 0.6 0.8 1.0

Packaging

This LED device is packed in an aluminum envelope with a silica gel and a moisture indicator to avoid moisture absorption. The optical characteristics of the devices may be affected by exposure to moisture in the air before soldering and they should therefore be stored under the following conditions:

1. This moisture proof bag may be stored unopened within 12 months at the following conditions.
   Temperature: 5°C to 30°C
   Humidity: 90% (max)
2. After opening the moisture proof bag, the device should be assembled within 168 hours in an environment of 5°C to 30°C/60% RH or below.
3. If upon opening, the moisture indicator card shows humidity 30% or above (Color of indication changes to pink) or the expiration date has passed, the devices should be baked in taping with reel.
   After baking, use the baked devices within 72 hours, but perform baking only once.
   Baking conditions: 60±5°C, for 24 to 48 hours.
   Expiration date: 12 months from sealing date, which is imprinted on the label affixed.
4. Repeated baking can cause the peeling strength of the taping to change, then leads to trouble in mounting.
5. If the packing material of laminate would be broken, the hermeticity would deteriorate. Therefore, do not throw or drop the packed devices.

Mounting Method

Soldering

- Reflow soldering (example)

Temperature profile for Pb soldering (example)

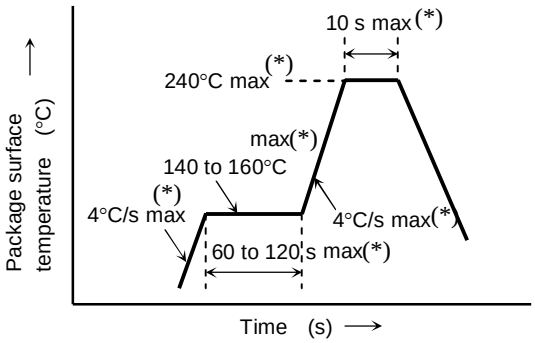

Temperature profile for Pb-free soldering (example)

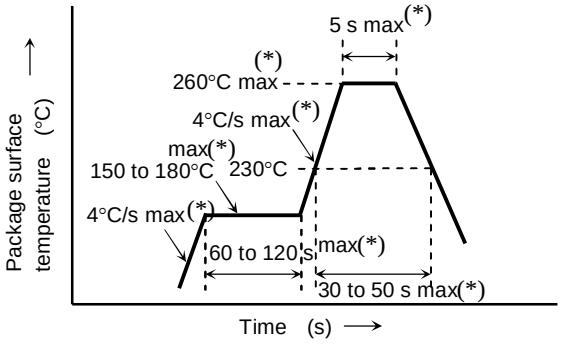

- The product is evaluated using above reflow soldering conditions. No additional test is performed exceed the condition (i.e. the condition more than (*)MAX values) as a evaluation. Please perform reflow soldering under the above conditions.
- Please perform the first reflow soldering with reference to the above temperature profile and within 168 h of opening the package.
- Second reflow soldering
  In case of second reflow soldering should be performed within 168 h of the first reflow under the above conditions.
  Storage conditions before the second reflow soldering: 30°C, 60% RH (max)
- When any soldering corrections are made manually,a hot-plate should be used .
  (only once at each soldering point)

Temperature of a hot plate:	150°C
Soldering iron:	25 W
Temperature:	350°C or less
Time:	within 3 s

- Do not perform wave soldering.

Recommended soldering pattern

Unit (mm)

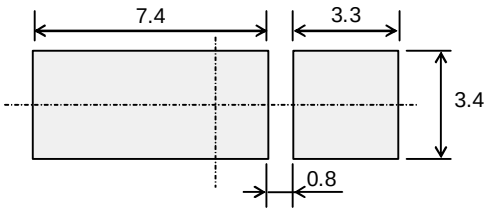

Cleaning

When cleaning is required after soldering, Toshiba recommends the following cleaning solvents.
It is confirmed that these solvents have no effect on semiconductor devices in our dipping test (under the recommended conditions). In selecting the one for your actual usage, please perform sufficient review on washing condition, using condition and etc.

ASAHI CLEAN AK-225AES: (made by ASAHI GLASS)

Precautions when Mounting

Do not apply force to the plastic part of the LED under high-temperature conditions.
To avoid damaging the LED plastic, do not apply friction using a hard material.
When installing the PCB in a product, ensure that the device does not come into contact with other cmponents.

Tape Specifications

1. Product number format

The type of package used for shipment is denoted by a symbol suffix after the product number. The method of classification is as below. (this method, however does not apply to products whose electrical characteristics differ from standard Toshiba specifications)

(1) Tape Type: T30 (8-mm pitch)

(2) Example

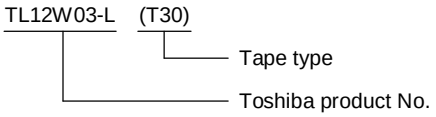

2. Handling precautions

Tape material protected against static electricity. However, static electricity may occur depending on quantity of charged static electricity and a device may attach to a tape, or a device may be unstable when peeling a tape cover.

(a) Since tape materials may accumulate an electrostatic charge, use an ionizer to neutralize the ambient air.

(b)For transport and temporary storage of devices, use containers (boxes and bags) and jigs that are made of anti-static materials or of materials which dissipate electrostatic charge.

3. Tape dimensions

Unit: mm

Symbol	Dimension	Tolerance
D	1.5	+0.1/−0
E	1.75	±0.1
P_0	4.0	±0.1
t	0.3	±0.05
F	11.5	±0.1
D_1	1.7	±0.1

Symbol	Dimension	Tolerance
P_2	2.0	±0.1
W	24.0	±0.2
P	8.0	±0.1
A_0	5.5	±0.1
B_0	11.0	±0.1
K_0	2.3	±0.1

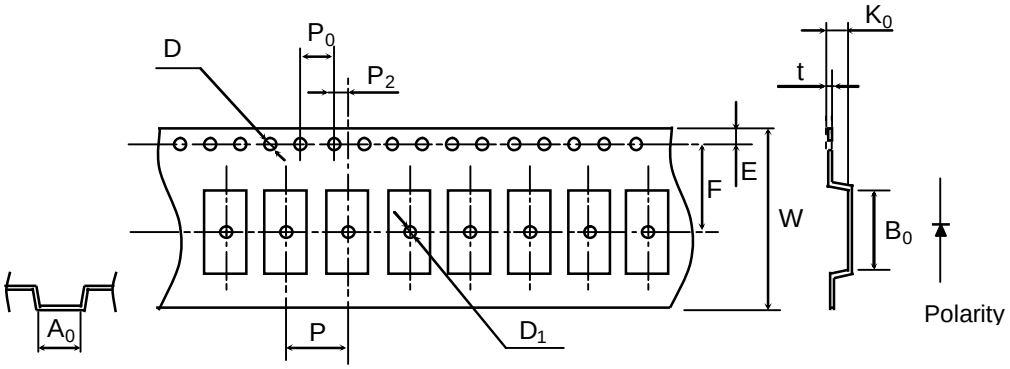

4. Reel dimensions

Unit: mm

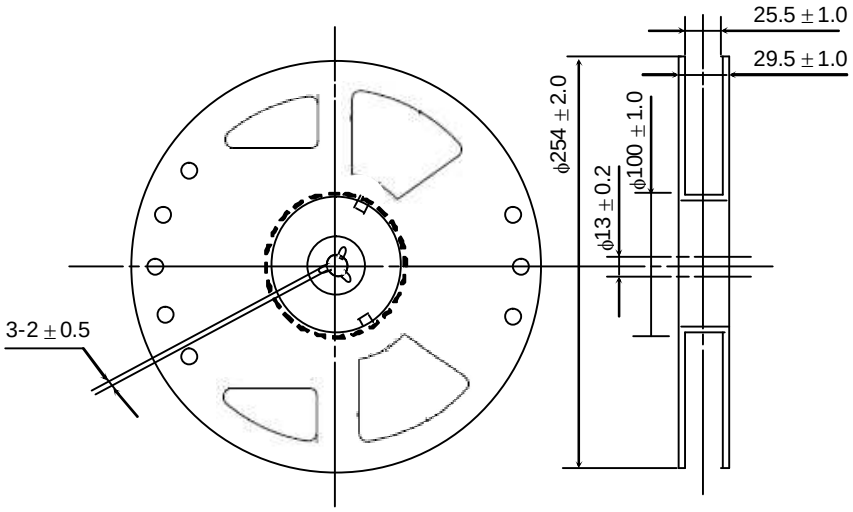

5. Leader and trailer sections of tape

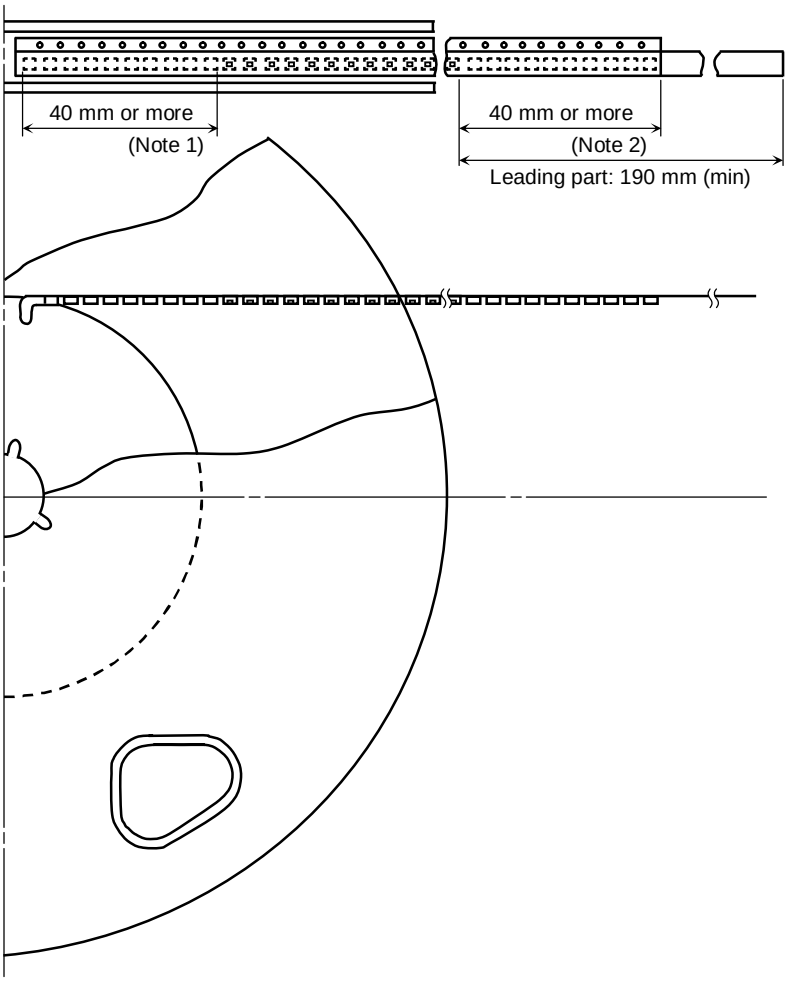

Note 1: Empty trailer section

Note 2: Empty leader section

6. Packing form

(1) Packing quantity

Reel	500 pcs
Carton	1000 pcs

(2) Packing form: Each reel is sealed in an aluminum pack with silica gel.

7. Label format

(1) Label contents

Shipped products are mentioned the following contents.

P/N:

TYPE	TL12W03-L		
ADDC	(T30)	Q'TY	500 pcs

TOSHIBA

1) xxxxxx 2) xxxxxxxx 4) xxx 5)xxxx
3) (xxxxx)

6) Use under 5-30degC/60%RH within 168h

SEALED: xxxxxxxx
[[G]]/RoHS COMPATIBLE DIFFUSED IN JAPAN
Y3804xxxxxxxxxxxxxxxxxx ASSEMBLED IN JAPAN

Contents about Note section (Each example means the contents are different for each lot.)

Information for customers use	Information for Toshiba use
1) Lot code Example: 2707C2B	4) Management code Example: 715 32G
2) Key code Example: 123456	5) Packing quantity Example: 500 pcs
3) Rank symbol Example: LT1F11	6) Storage condition after opening Use under 5-30 degC/60%RH within 168h

(2) Label location

- Reel

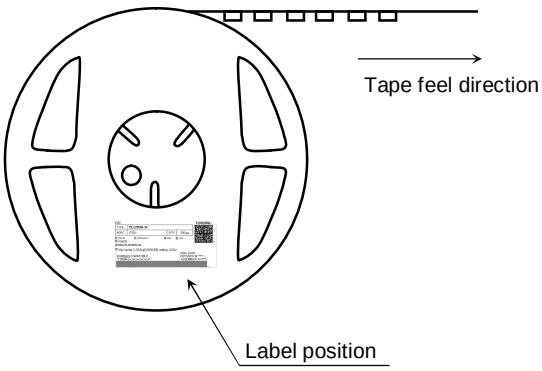

- Carton

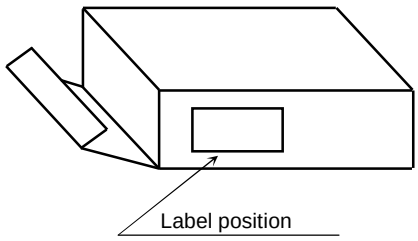

- The aluminum package in which the reel is supplied also has the label attached to center of one side.

RESTRICTIONS ON PRODUCT USE

- Toshiba Corporation, and its subsidiaries and affiliates (collectively “TOSHIBA”), reserve the right to make changes to the information in this document, and related hardware, software and systems (collectively “Product”) without notice.

- This document and any information herein may not be reproduced without prior written permission from TOSHIBA. Even with TOSHIBA’s written permission, reproduction is permissible only if reproduction is without alteration/omission.

- Though TOSHIBA works continually to improve Product’s quality and reliability, Product can malfunction or fail. Customers are responsible for complying with safety standards and for providing adequate designs and safeguards for their hardware, software and systems which minimize risk and avoid situations in which a malfunction or failure of Product could cause loss of human life, bodily injury or damage to property, including data loss or corruption. Before creating and producing designs and using, customers must also refer to and comply with (a) the latest versions of all relevant TOSHIBA information, including without limitation, this document, the specifications, the data sheets and application notes for Product and the precautions and conditions set forth in the “TOSHIBA Semiconductor Reliability Handbook” and (b) the instructions for the application that Product will be used with or for. Customers are solely responsible for all aspects of their own product design or applications, including but not limited to (a) determining the appropriateness of the use of this Product in such design or applications; (b) evaluating and determining the applicability of any information contained in this document, or in charts, diagrams, programs, algorithms, sample application circuits, or any other referenced documents; and (c) validating all operating parameters for such designs and applications. **TOSHIBA ASSUMES NO LIABILITY FOR CUSTOMERS’ PRODUCT DESIGN OR APPLICATIONS.**

- Product is intended for use in general electronics applications (e.g., computers, personal equipment, office equipment, measuring equipment, industrial robots and home electronics appliances) or for specific applications as expressly stated in this document. Product is neither intended nor warranted for use in equipment or systems that require extraordinarily high levels of quality and/or reliability and/or a malfunction or failure of which may cause loss of human life, bodily injury, serious property damage or serious public impact (“Unintended Use”). Unintended Use includes, without limitation, equipment used in nuclear facilities, equipment used in the aerospace industry, medical equipment, equipment used for automobiles, trains, ships and other transportation, traffic signaling equipment, equipment used to control combustions or explosions, safety devices, elevators and escalators, devices related to electric power, and equipment used in finance-related fields. Do not use Product for Unintended Use unless specifically permitted in this document.

- Do not disassemble, analyze, reverse-engineer, alter, modify, translate or copy Product, whether in whole or in part.

- Product shall not be used for or incorporated into any products or systems whose manufacture, use, or sale is prohibited under any applicable laws or regulations.

- The information contained herein is presented only as guidance for Product use. No responsibility is assumed by TOSHIBA for any infringement of patents or any other intellectual property rights of third parties that may result from the use of Product. No license to any intellectual property right is granted by this document, whether express or implied, by estoppel or otherwise.

- **ABSENT A WRITTEN SIGNED AGREEMENT, EXCEPT AS PROVIDED IN THE RELEVANT TERMS AND CONDITIONS OF SALE FOR PRODUCT, AND TO THE MAXIMUM EXTENT ALLOWABLE BY LAW, TOSHIBA (1) ASSUMES NO LIABILITY WHATSOEVER, INCLUDING WITHOUT LIMITATION, INDIRECT, CONSEQUENTIAL, SPECIAL, OR INCIDENTAL DAMAGES OR LOSS, INCLUDING WITHOUT LIMITATION, LOSS OF PROFITS, LOSS OF OPPORTUNITIES, BUSINESS INTERRUPTION AND LOSS OF DATA, AND (2) DISCLAIMS ANY AND ALL EXPRESS OR IMPLIED WARRANTIES AND CONDITIONS RELATED TO SALE, USE OF PRODUCT, OR INFORMATION, INCLUDING WARRANTIES OR CONDITIONS OF MERCHANTABILITY, FITNESS FOR A PARTICULAR PURPOSE, ACCURACY OF INFORMATION, OR NONINFRINGEMENT.**

- Do not use or otherwise make available Product or related software or technology for any military purposes, including without limitation, for the design, development, use, stockpiling or manufacturing of nuclear, chemical, or biological weapons or missile technology products (mass destruction weapons). Product and related software and technology may be controlled under the Japanese Foreign Exchange and Foreign Trade Law and the U.S. Export Administration Regulations. Export and re-export of Product or related software or technology are strictly prohibited except in compliance with all applicable export laws and regulations.

- Please contact your TOSHIBA sales representative for details as to environmental matters such as the RoHS compatibility of Product. Please use Product in compliance with all applicable laws and regulations that regulate the inclusion or use of controlled substances, including without limitation, the EU RoHS Directive. TOSHIBA assumes no liability for damages or losses occurring as a result of noncompliance with applicable laws and regulations.