Infrared Light Emitting Diodes Top View Type

SCM-013RT

[Product description]

ROHM's opetical sensors serve as eyes to monitor changes of any motions, and comply with customers' day-to-day diversifying requests.

Features

・Molded type with lenz

・Automatic mount and reflow

Product specifications

Absolute maximum ratings (Ta=25ºC)		
Rated parameters	Standard value	Conditions
Forward current I_F(mA)	30	
Reverse voltage V_R(V)	5	
Power dissipation P_D(mW)	57	
Peak forward current I_{FP}(A)	0.5	Duty1/10,kHz
Operating temperature Topr(ºC)	-30 to 85	
Storage temperature Tstg(ºC)	-30 to 100	

Electro-optical characteristics (Ta=25ºC)		
Rated parameters	Standard value	Conditions
Optical output P_O	-	
Emitting strength-Min. IE(mW/sr)	0.5	I_F=20mA
Emitting strength-Typ. IE(mW/sr)	2	I_F=20mA
Forward voltage V_F(V)	1.6	I_F=20mA
Reverse current I_R(μA)	10	V_R=5V
Peak light emitting wavelength λP(nm)	850	I_F=20mA
Spectral line half width Δλ	-	
Half viewing angle θ1/2	-	
Response time tr·tf	-	
Cut-off frequency F_C	-	

Outline

Surface Mount Type (Topview)

Dimensions

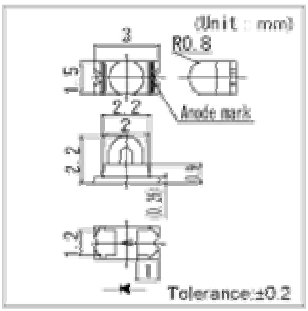

*The contents described here are just outline for introduction.

Please obtain the specification sheets from us for thorough check before use.

Copyright © 1997-2011 ROHM CO.,LTD.