Alle Rechte vorbehalten/ *All rights reserved*

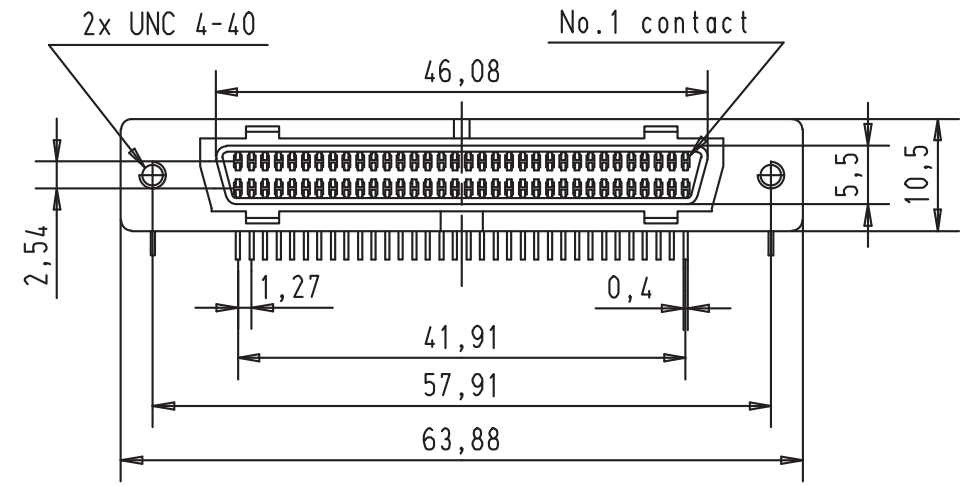

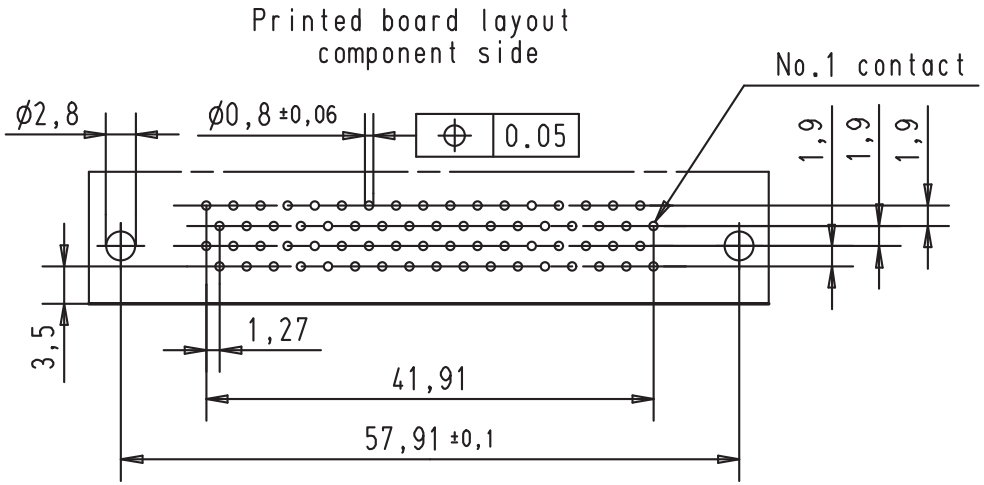

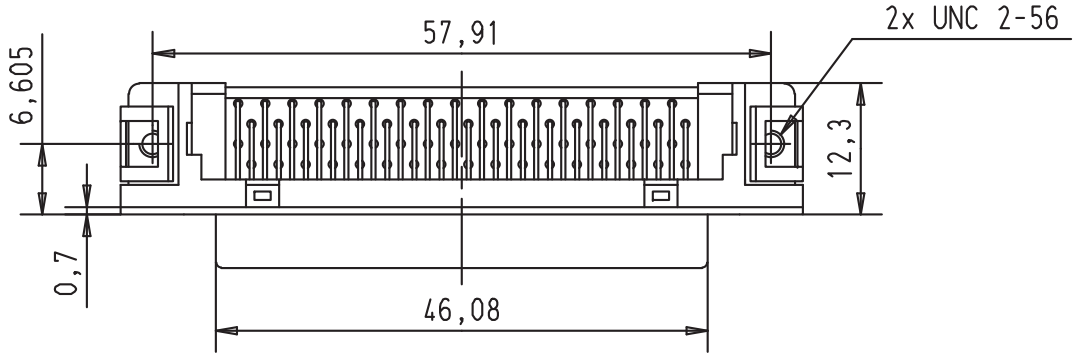

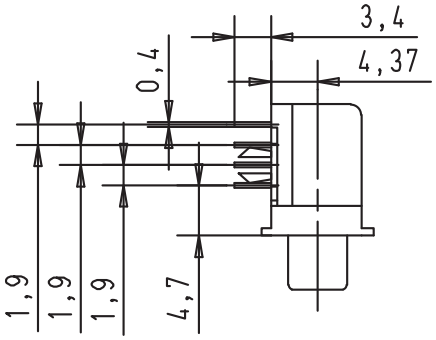

				Dat.	Name		har.mik® I/O pin/socket	Maßstab/ Scale
			Detail.	21 JUN 01	S G	All Dim. in mm	68 poles female connector	1,5:1
			Insp.			Orig. Size DIN A 4	with angled solder pins and	
			Stand.				without female screw lock	
29686	21 JUN 01	S G	HARTING EURL				TB 60 02 068 5150	Blatt/Page 1/1
Mod.	Dat.	Name	F-95972 Paris				Sub.	