THIS COPY IS PROVIDED ON A RESTRICTED BASIS AND IS NOT TO BE USED IN ANY WAY DETRIMENTAL TO THE INTERESTS OF PANDUIT CORP.

NOTES:
1. SEE THE PANDUIT WEBSITE FOR ADDITIONAL PART NUMBER SUFFIXES TO INDICATE PACKAGE QUANTITY.
2. SEE WEBSITE FOR COMPLETE LIST OF PARTS APPLICABLE FOR USE WITH THIS PART.
3. DIMENSIONS IN [ ] ARE IN METRIC.
4. KIT CONTAINS:
   1- CAMERA COVERING HOOD (BLACK)

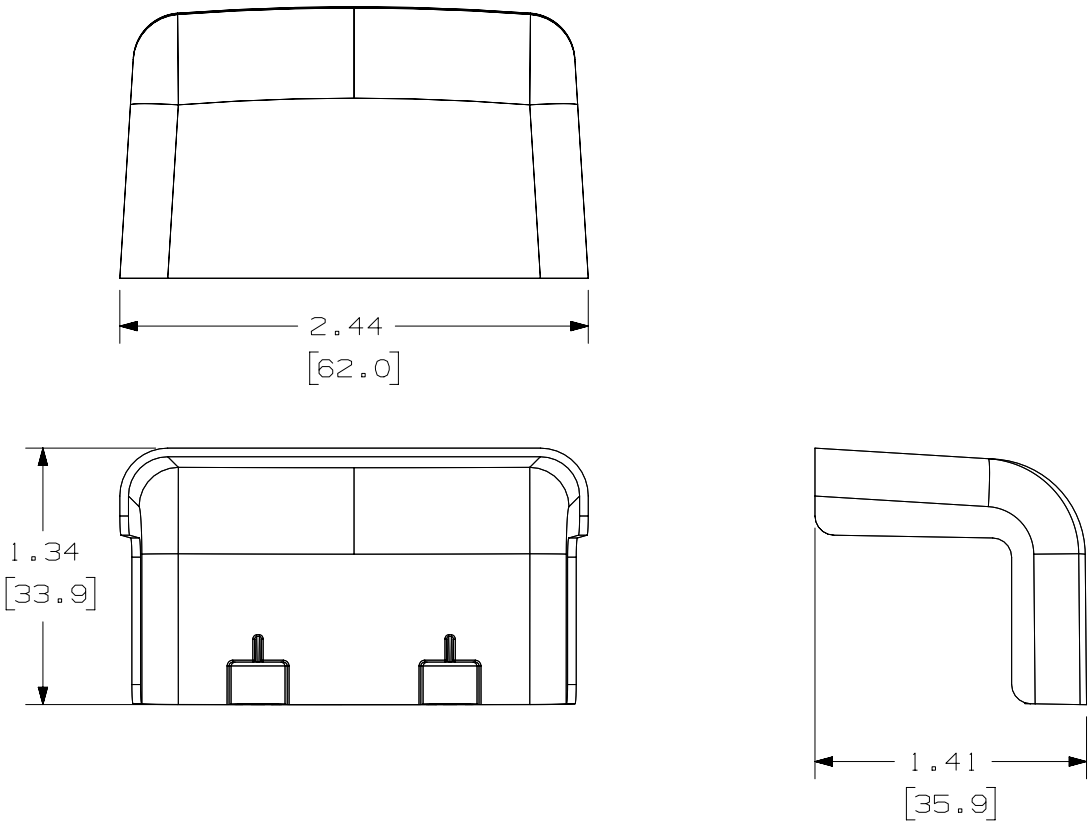

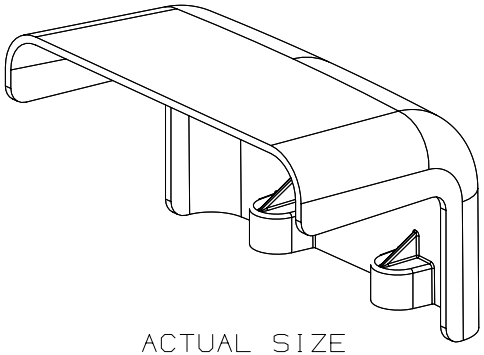

ACTUAL SIZE

PRODUCT SPEC: N/A	PACKAGING SPEC: N/A
PART NUMBER: FCCVR2	WORK INSTRUCTION: N/A
INSPECTION INSTRUCTION NUMBER: N/A	FMEA & CONTROL PLAN NUMBER: N/A

TITLE

OPTICAM OPTICAL COVER

CUSTOMER DRAWING

ITEM REVISION NAME: 00045SCP/00

DATASET FILE NAME: 00045SCP_DC/00A

UNLESS OTHERWISE SPECIFIED, DIMENSIONAL TOLERANCES ARE: IN [mm]

.X ± .XXX ±

.XX ± ANGLES ±

THIRD ANGLE PROJECTION

MATERIAL: SEE NOTES

DRAWING NUMBER: 00045SCP-DC

DRAWN BY	DATE	CHK	SCALE		SIZE
BJN	3-20-17	WFMI	FULL	SHT 1 OF 1	A

REV	DATE	BY	CHK	APR	DESCRIPTION	ECN
R	3-20-17	BJN	WFMI	SKH	RELEASED TO PRODUCTION	00045SCP-DC

D10100DA/20