L1 is a Bead to be mounted if the regulator U2 and capacitors C12 and C41 are not mounted. By default the regulator is not mounted

CC120x using XTAL: do not mount X2, C321, C322 R321, R322
CC120x using TCXO: do not mount R12, R321, C311, X1, C301: mount 0 Ohm resistor

R12 is a 0 Ohms shunt resistor that ground the EXT_OSC pin when TCXO is not mounted

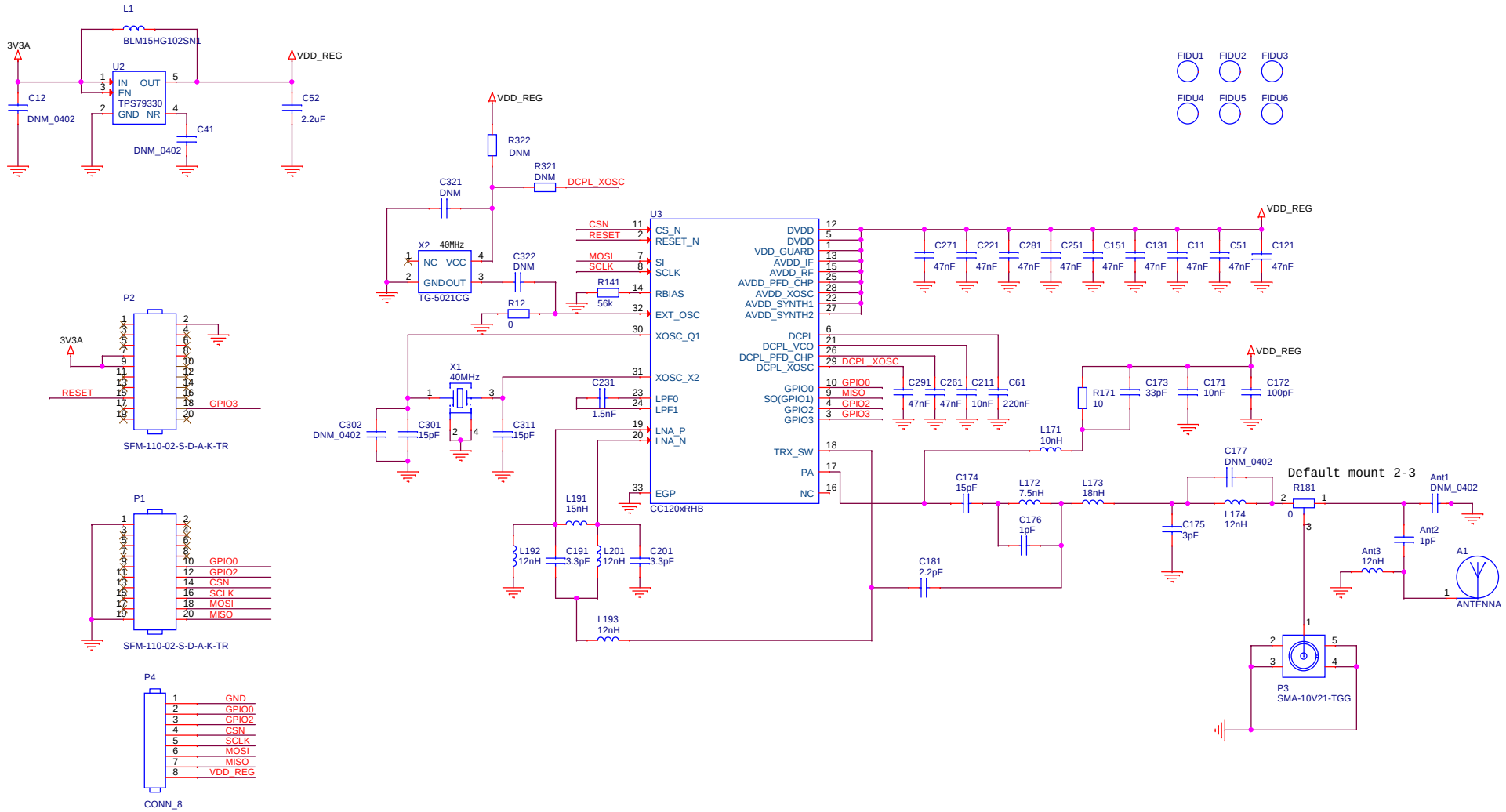

Size	CAGE Code	DWG NO	Rev
A3		CC120XEM_868_915	A
Scale			Sheet 1 of 1

Monday, January 28, 2013